Specification

A200C-WG-D28X96-3D-2/30
200mm 3-2D Central Locking Single Caster

Caster with total lock and free Functions.

The build-in seamless ball bearing ensure the balance and caster stability; with 3mm thickness steel plate ensure the strength and durability of the caster; high density aluminum alloy support improves the structure rigidity and bearing capacity.

Using TPU wheel surface has excellent shock absorption, wear resistance, safe and reliable.

Apply to the stem with cam hole.

Technical Data
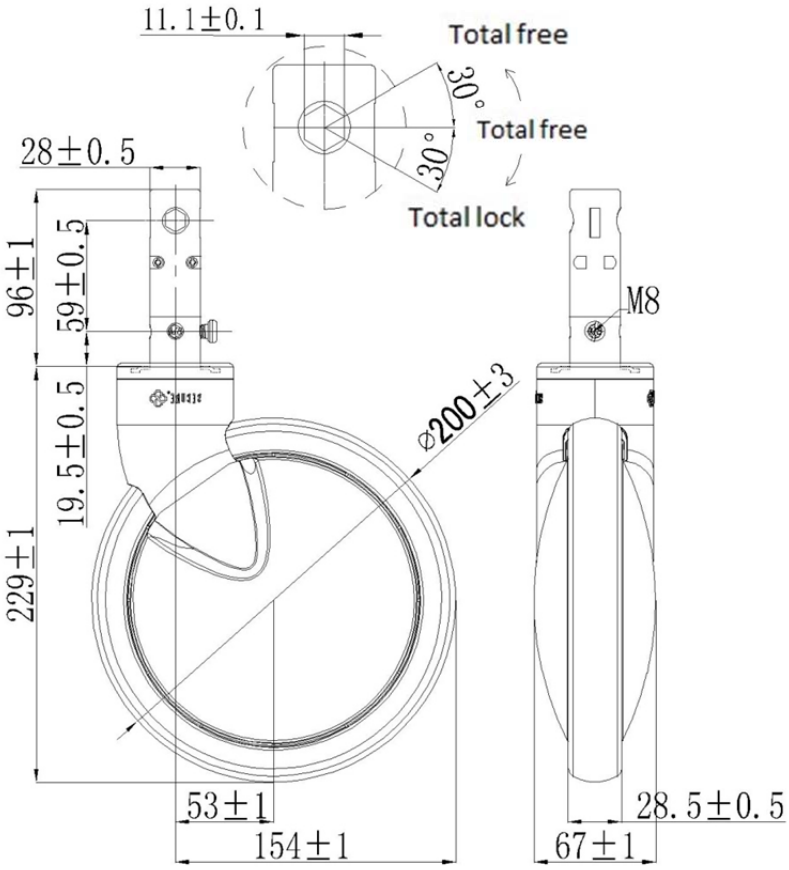
Wheel Diameter	200mm
Caster Width	67mm
Tread Width	28.5mm
Stem Diameter	28mm
Stem Length	96mm
Offset	53mm
Swivel Radius	154mm
Swivel Interference	308mm
Overall Height	229mm
Temperature	-30/+80℃
Standard	EN12531
Weight	1.93KG
Dynamic Load Capacity	160KG
Static Load Capacity	200KG